A144 UNIT②/Kitchen

Material

Door1 : 18mm PB（GM5036）

Carcass1 :18mm PB（GM5036）

Handle :明装拉手（客备）

DRW&HNG :DTC soft close

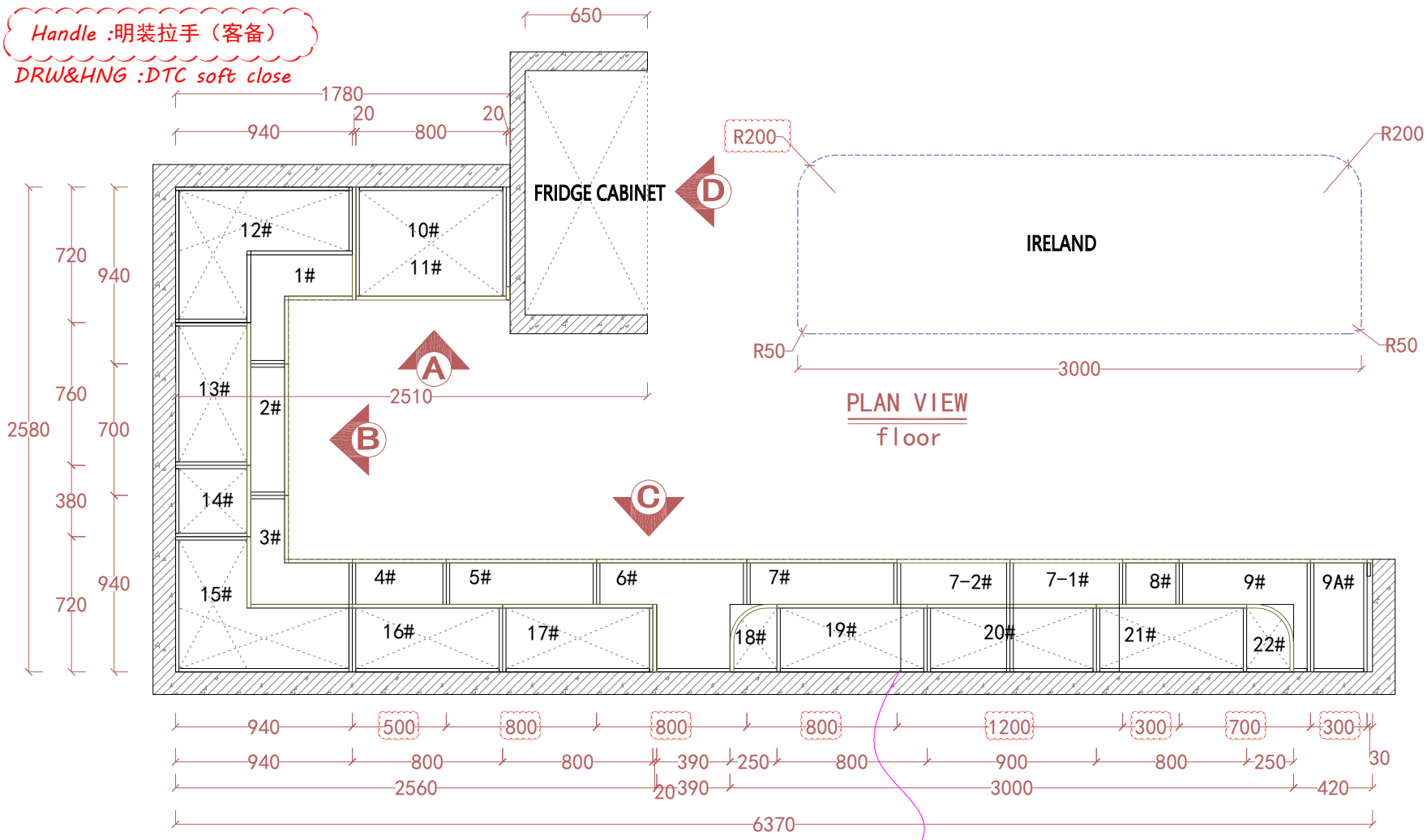

ALL handles client-supplied.

橱柜所有吊柜背板全部后退5线位

BENSON

DESIGN FIRM
Benson Cabinetry (Foshan) Co., Ltd.

This drawing is copyright
Contractors shall work from figured dimensions only
Contractors must check all dimensions on site
Contractors must be reported immediately to architects

Customer Signature

Project incharge signature

Approved by

Date:

A144 UNIT②/Kitchen

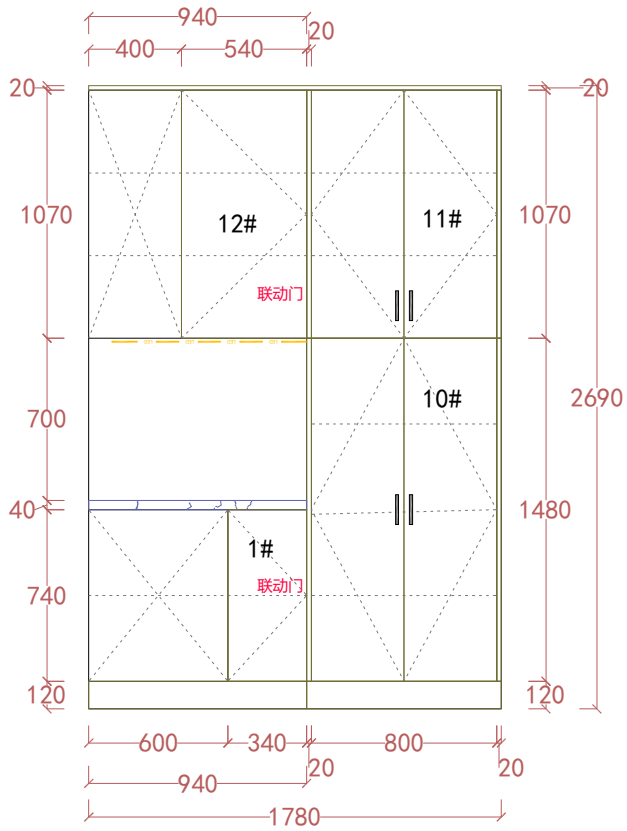

ELEVATION A

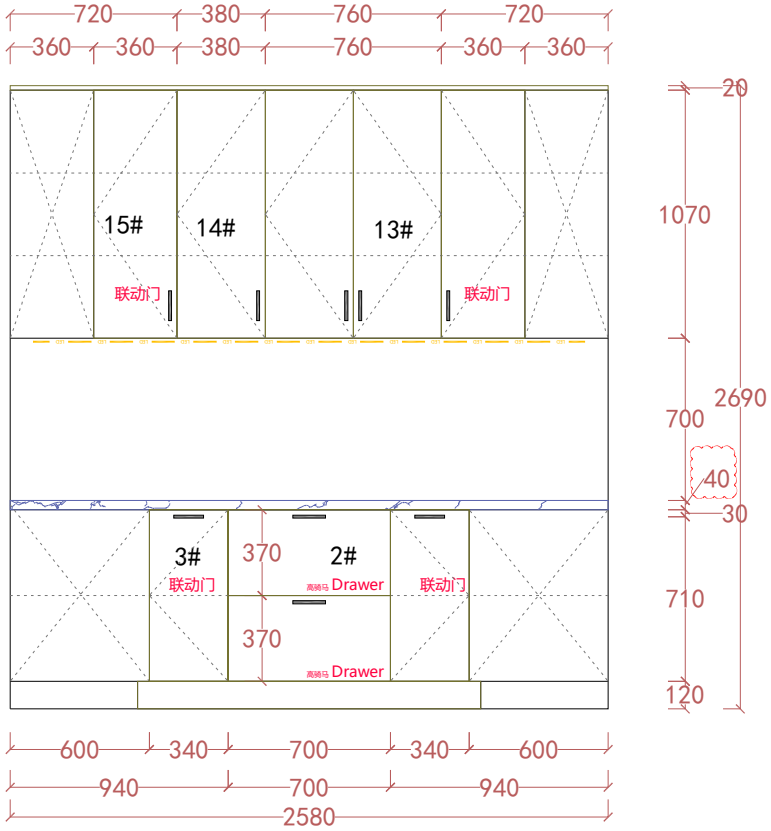

ELEVATION B

BENSON

DESIGN FIRM
Benson Cabinetry (Foshan) Co., Ltd.

This drawing is copyright
Contractors shall work from figured dimensions only
Contractors must check all dimensions on site
Contractors must be reported immediately to architects

Customer Signature

Project incharge signature

Approved by

Date:

A144 UNIT②/Kitchen

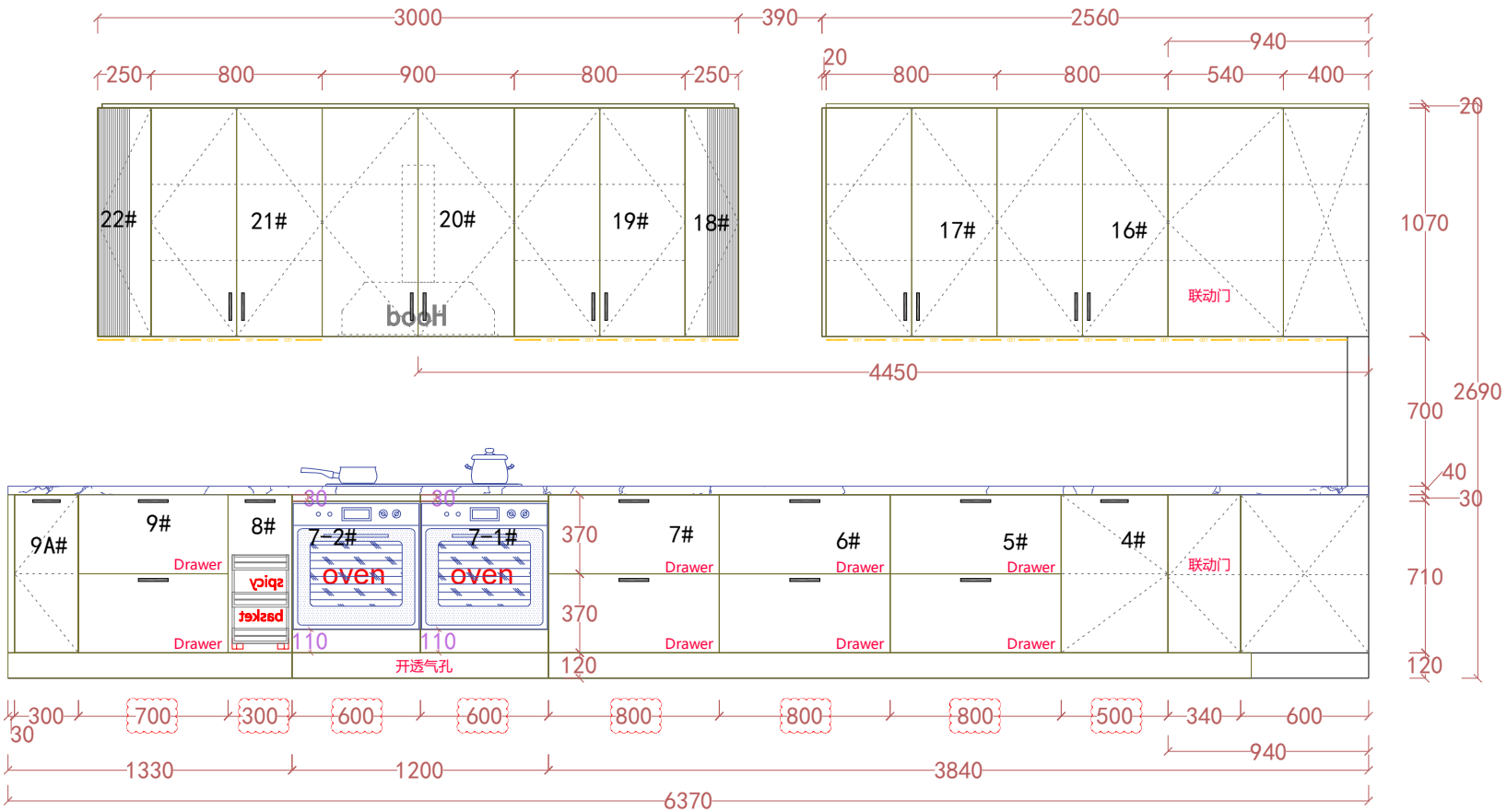

ELEVATION C

BENSON

DESIGN FIRM
Benson Cabinetry (Foshan) Co., Ltd.

This drawing is copyright
Contractors shall work from figured dimensions only
Contractors must check all dimensions on site
Contractors must be reported immediately to architects

Customer Signature

Project incharge signature

Approved by

Date:

A144 UNIT②/Kitchen （FRIDGE CABINET）

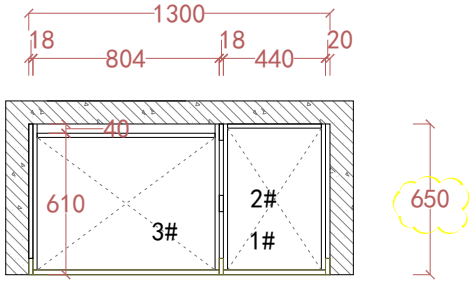

PLAN VIEW
floor

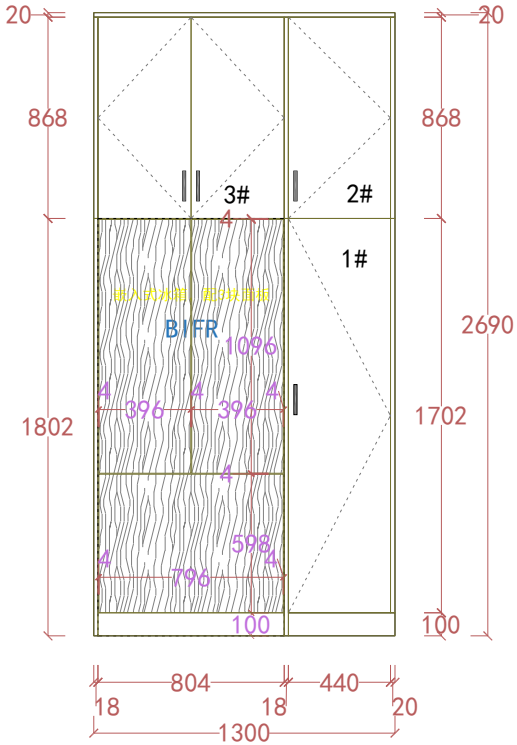

ELEVATION D

INNER VIEW D

BENSON

DESIGN FIRM
Benson Cabinetry (Foshan) Co., Ltd.

This drawing is copyright
Contractors shall work from figured dimensions only
Contractors must check all dimensions on site
Contractors must be reported immediately to architects

Customer Signature

Project incharge signature

Approved by

Date:

A144 UNIT②/Kitchen （IRELAND）

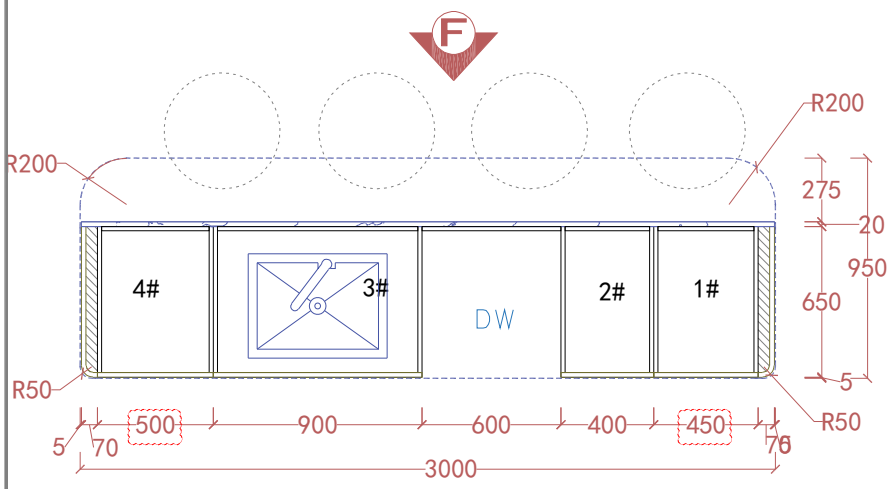

PLAN VIEW
floor

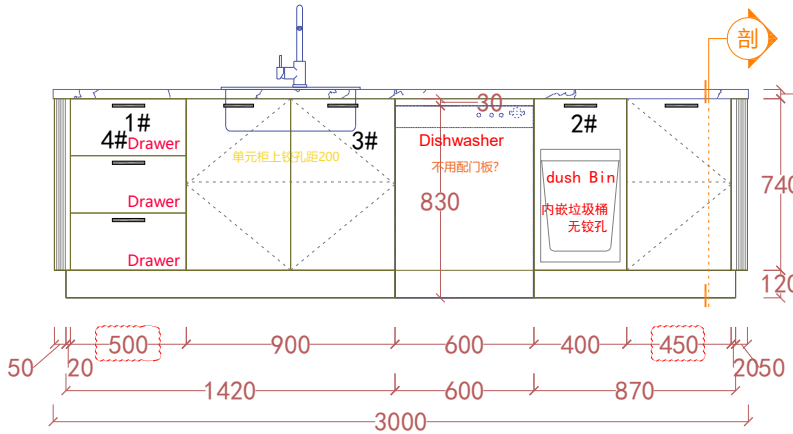

ELEVATION E

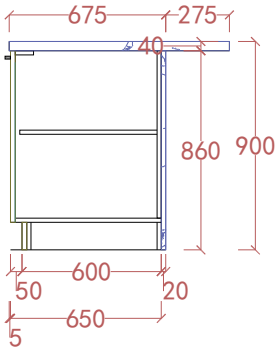

SECTION VIEW

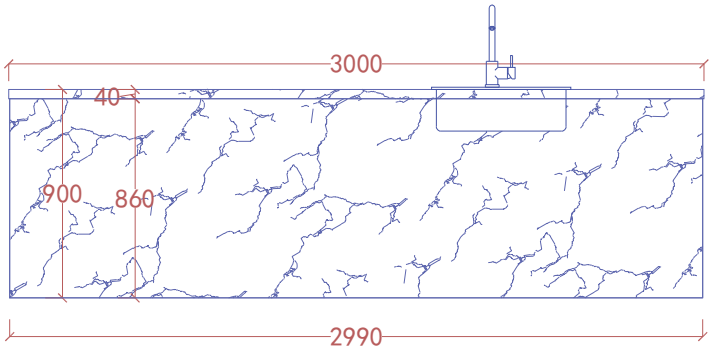

ELEVATION F

BENSON

DESIGN FIRM
Benson Cabinetry (Foshan) Co., Ltd.

This drawing is copyright
Contractors shall work from figured dimensions only
Contractors must check all dimensions on site
Contractors must be reported immediately to architects

Customer Signature

Project incharge signature

Approved by

Date:

A144 UNIT②/Entertainment

Material

Door1 : 18mm PB（GM5036）

Carcass1 :18mm PB（GM5036）

Handle :明拉手（客备）

DRW&HNG :DTC soft close

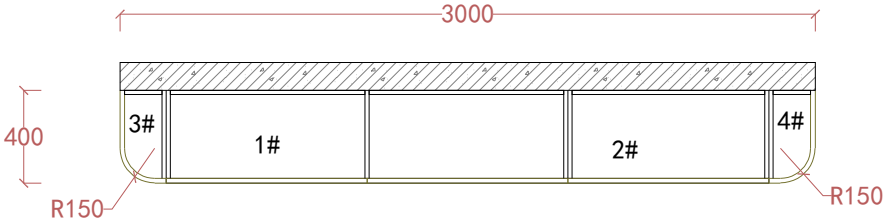

PLAN VIEW
floor

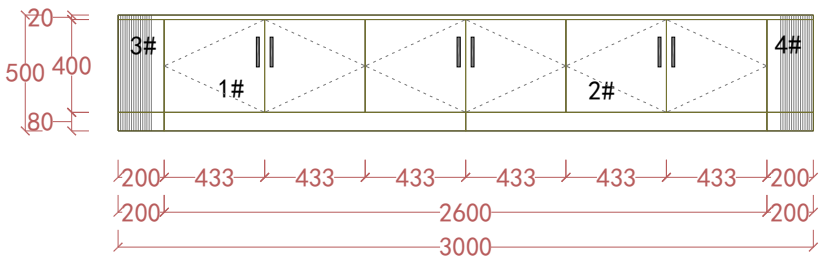

OUTSIDE VIEW

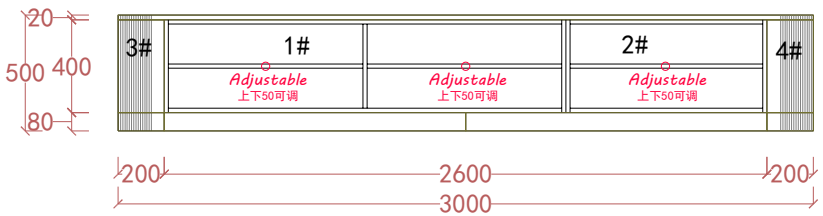

INNER VIEW

板超长，台面要49尺

BENSON

DESIGN FIRM
Benson Cabinetry (Foshan) Co., Ltd.

This drawing is copyright
Contractors shall work from figured dimensions only
Contractors must check all dimensions on site
Contractors must be reported immediately to architects

Customer Signature

Project incharge signature

Approved by

Date:

A144 UNIT②/VANITES

Material

Door1 : 18mm PB（GM5036）

Carcass1 :18mm PB（GM5036）

Handle :明装拉手（客备）

DRW&HNG :DTC soft close

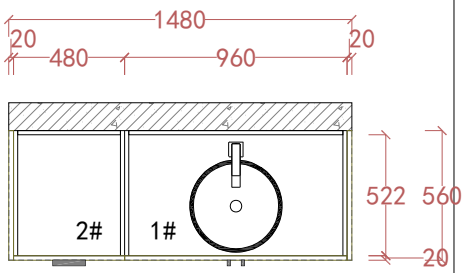

PLAN VIEW
floor

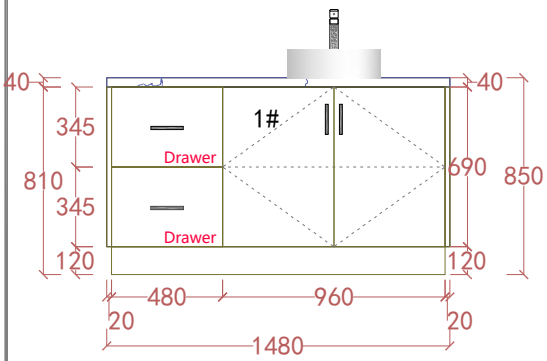

ELEVATION

A144 UNIT②/ENSUITE VANITY

ALL handles client-supplied.

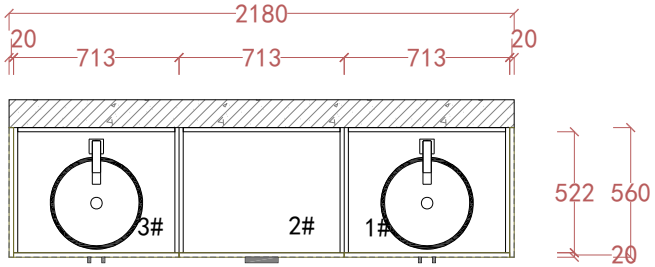

PLAN VIEW
floor

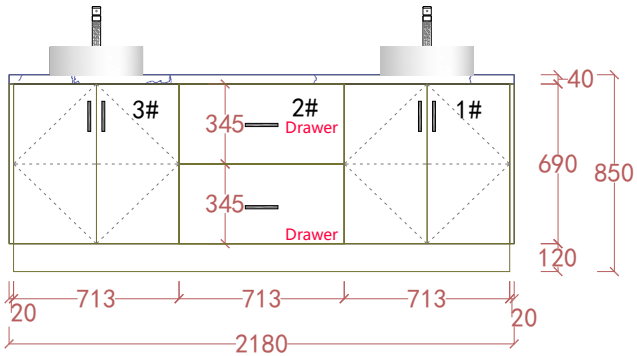

ELEVATION

A144 UNIT②/BATH VANITY

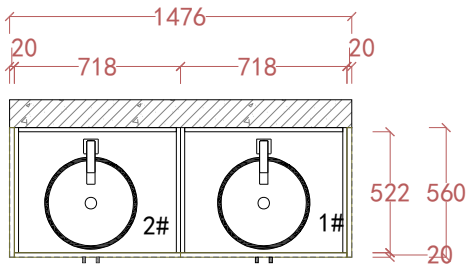

PLAN VIEW
floor

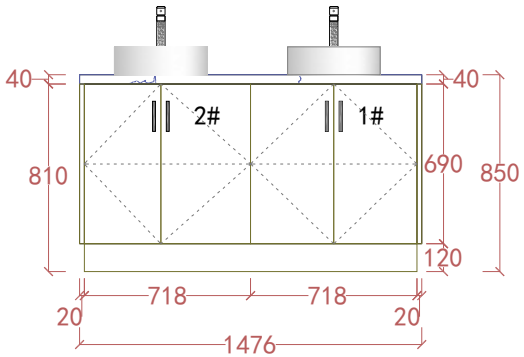

ELEVATION

BENSON

DESIGN FIRM
Benson Cabinetry (Foshan) Co., Ltd.

This drawing is copyright
Contractors shall work from figured dimensions only
Contractors must check all dimensions on site
Contractors must be reported immediately to architects

Customer Signature

Project incharge signature

Approved by

Date:

A144 UNIT②/STUDY NOOK

Material

Door1 : 18mm PB（GM5036）

Carcass1 :18mm PB（GM5036）

Handle :免拉手

DRW&HNG :DTC soft close

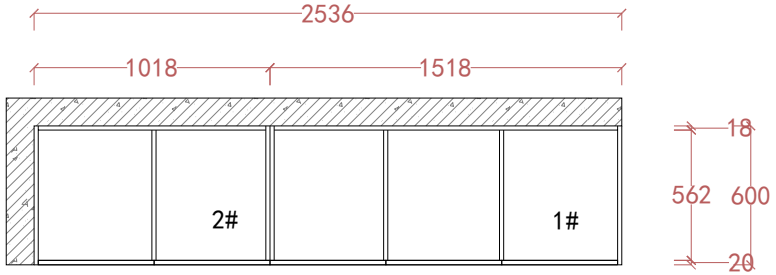

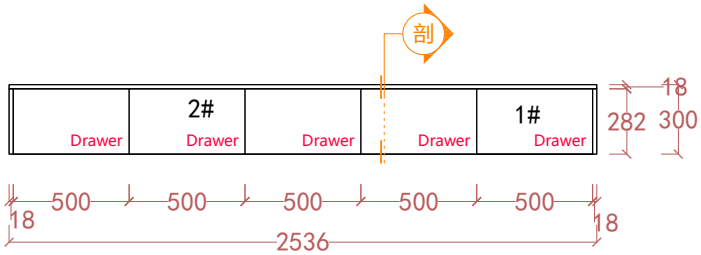

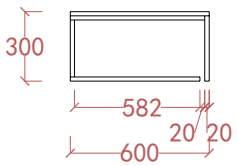

板超长，台面要49尺

BENSON

DESIGN FIRM
Benson Cabinetry (Foshan) Co., Ltd.

This drawing is copyright
Contractors shall work from figured dimensions only
Contractors must check all dimensions on site
Contractors must be reported immediately to architects

Customer Signature

Project incharge signature

Approved by

Date:

A144 UNIT②/LINEN CUPBOARD

Optimized Version

Material

Door1 : 18mm PB（GM5036）

Carcass1 :18mm PB（GM5036）

Handle :明装拉手（客备）

DRW&HNG :DTC soft close

ALL handles client-supplied.

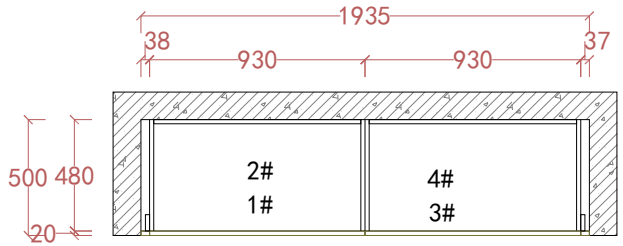

PLAN VIEW
floor

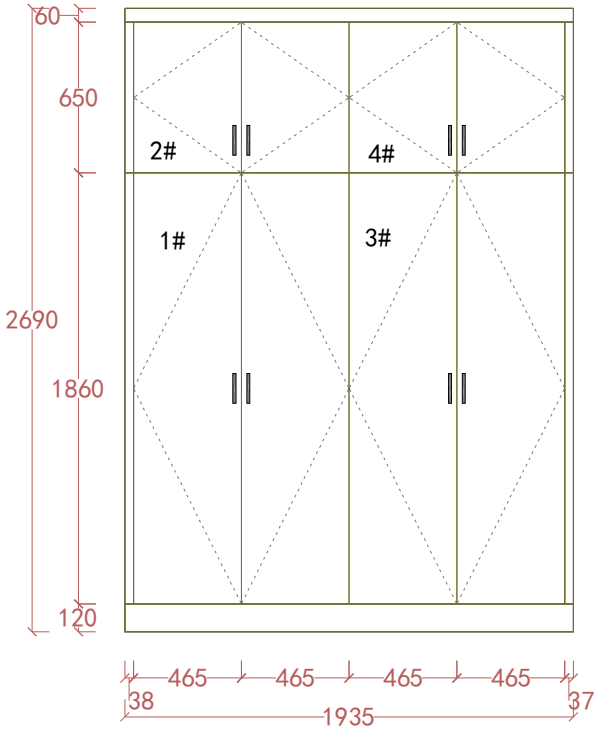

OUTSIDE VIEW

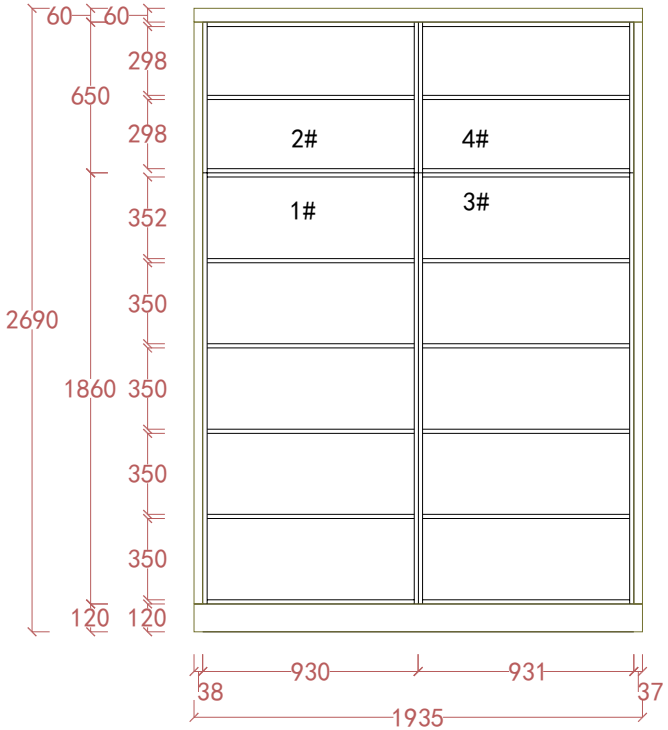

INNER VIEW

BENSON

DESIGN FIRM
Benson Cabinetry (Foshan) Co., Ltd.

This drawing is copyright
Contractors shall work from figured dimensions only
Contractors must check all dimensions on site
Contractors must be reported immediately to architects

Customer Signature

Project incharge signature

Approved by

Date:

A144 UNIT②/LAUNDRY

Material

Door1 : 18mm PB（GM5036）

Carcass1 :18mm PB（GM5036）

Handle :明装拉手（客备）

DRW&HNG :DTC soft close

ALL handles client-supplied.

PLAN VIEW
floor

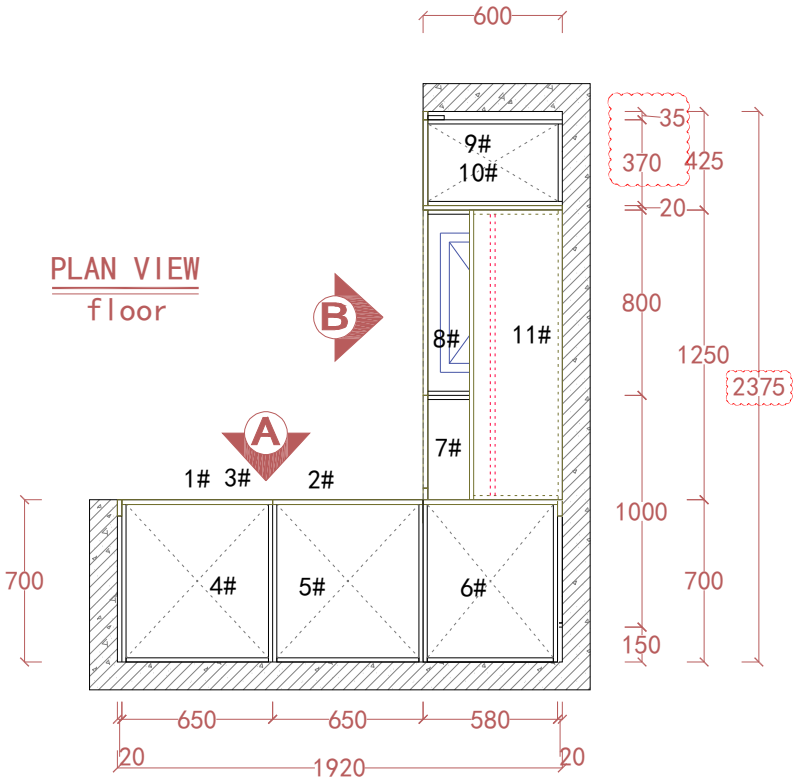

BENSON

DESIGN FIRM
Benson Cabinetry (Foshan) Co., Ltd.

This drawing is copyright
Contractors shall work from figured dimensions only
Contractors must check all dimensions on site
Contractors must be reported immediately to architects

Customer Signature

Project incharge signature

Approved by

Date:

A144 UNIT②/LAUNDRY

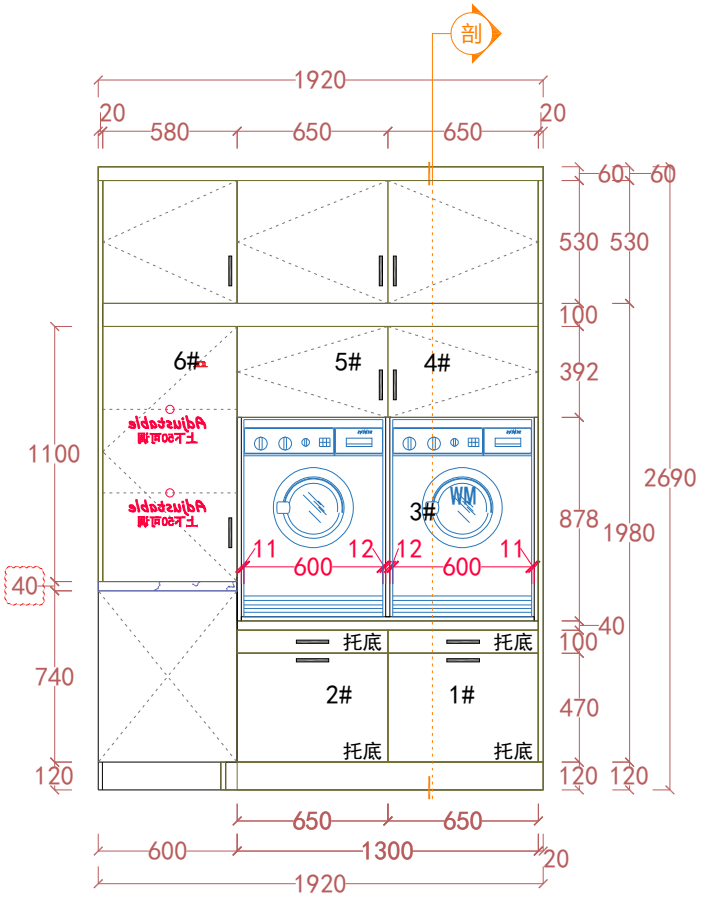

ELEVATION A

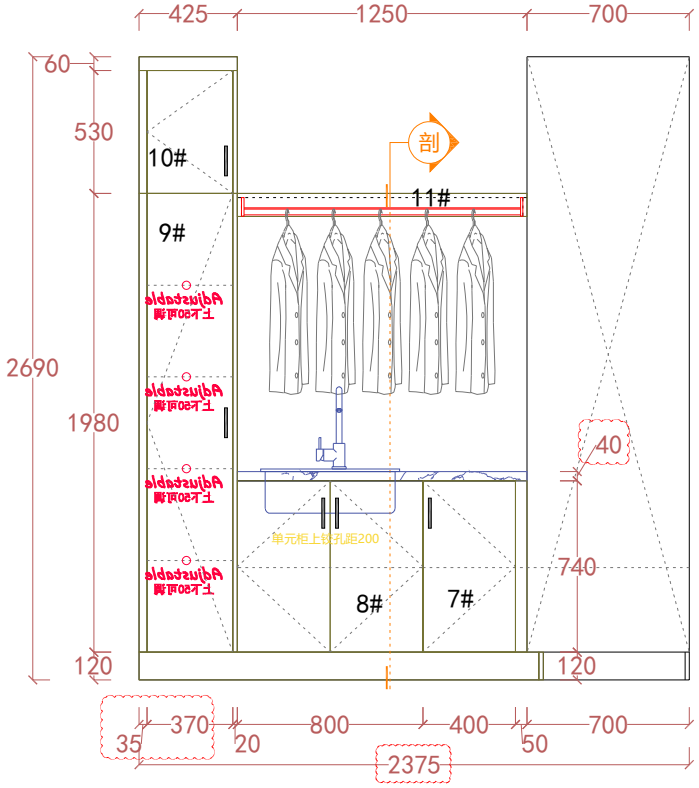

ELEVATION B

BENSON

DESIGN FIRM
Benson Cabinetry (Foshan) Co., Ltd.

This drawing is copyright
Contractors shall work from figured dimensions only
Contractors must check all dimensions on site
Contractors must be reported immediately to architects

Customer Signature

Project incharge signature

Approved by

Date:

A144 UNIT②/LAUNDRY

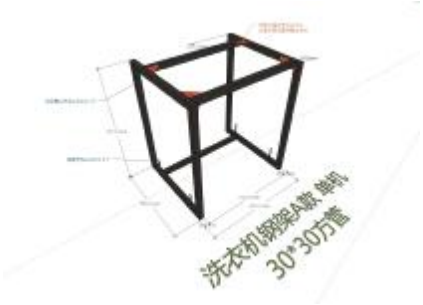

注意尺寸和柜图是否一至

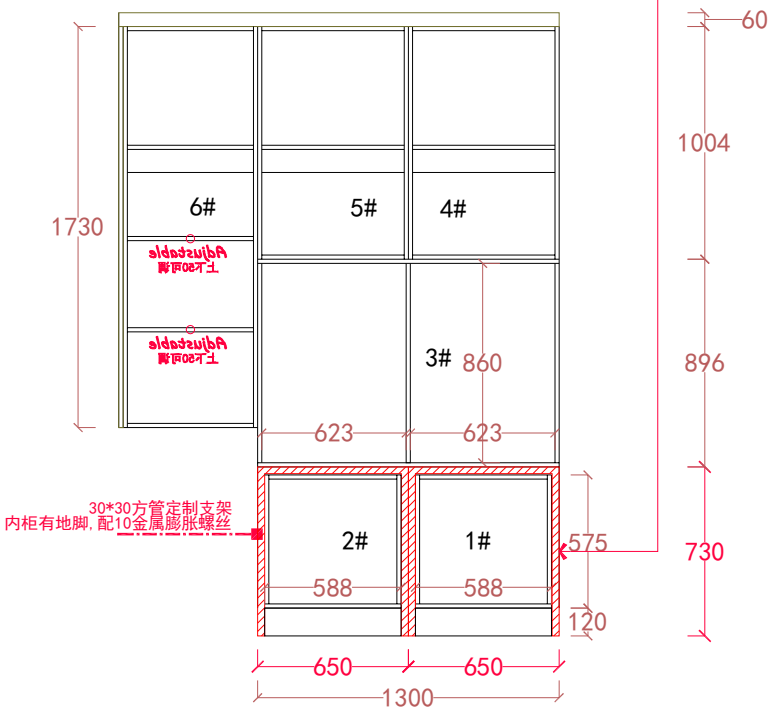

INNER VIEW A

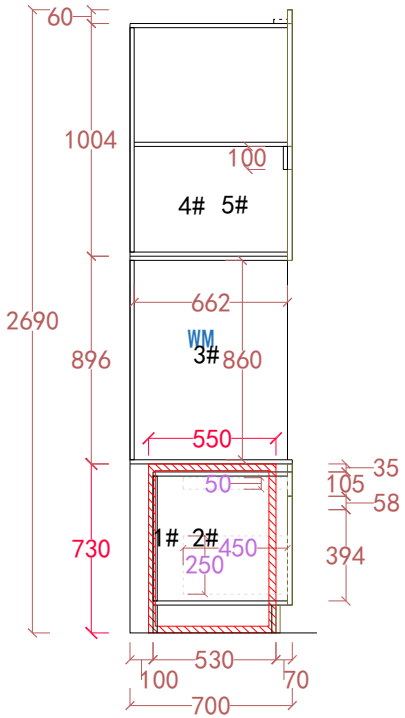

SECTION VIEW

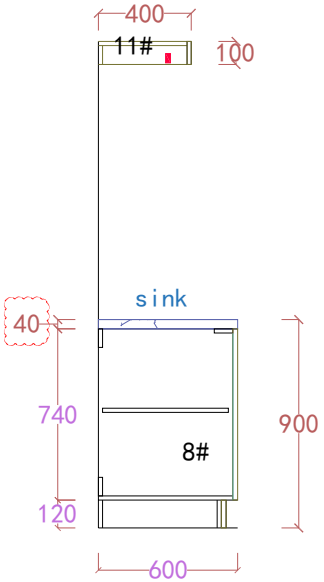

SECTION VIEW

BENSON

DESIGN FIRM
Benson Cabinetry (Foshan) Co., Ltd.

This drawing is copyright
Contractors shall work from figured dimensions only
Contractors must check all dimensions on site
Contractors must be reported immediately to architects

Customer Signature

Project incharge signature

Approved by

Date:

A144 UNIT②/MASTER BEDROOM WIR

Optimized Version

Material

Door1 : 18mm PB（GM5036）

Carcass1 :18mm PB（GM5036）

Handle :明装拉手 客户自备

DRW&HNG :DTC soft close

ALL handles client-supplied.

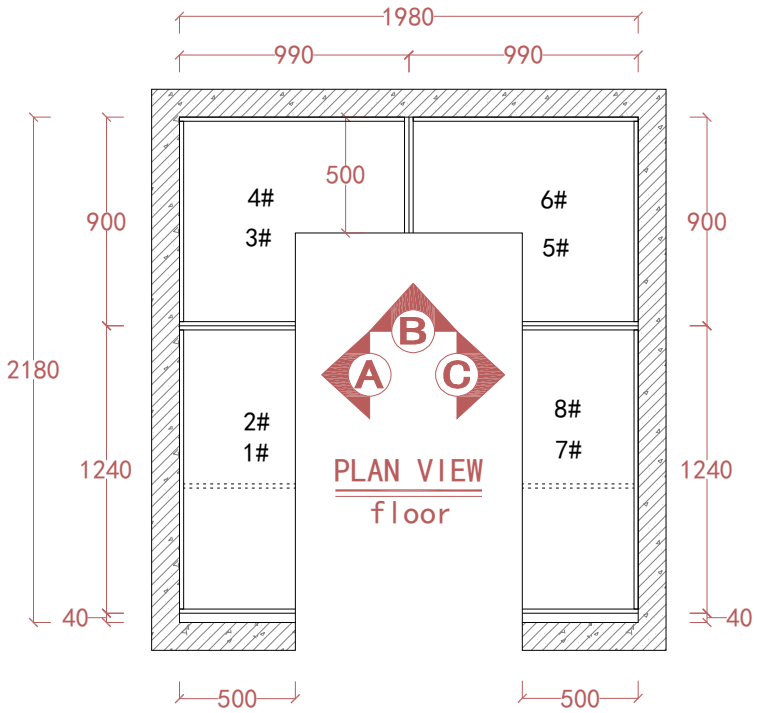

BENSON

DESIGN FIRM
Benson Cabinetry (Foshan) Co., Ltd.

This drawing is copyright
Contractors shall work from figured dimensions only
Contractors must check all dimensions on site
Contractors must be reported immediately to architects

Customer Signature

Project incharge signature

Approved by

Date:

A144 UNIT②/MASTER BEDROOM WIR

Optimized Version

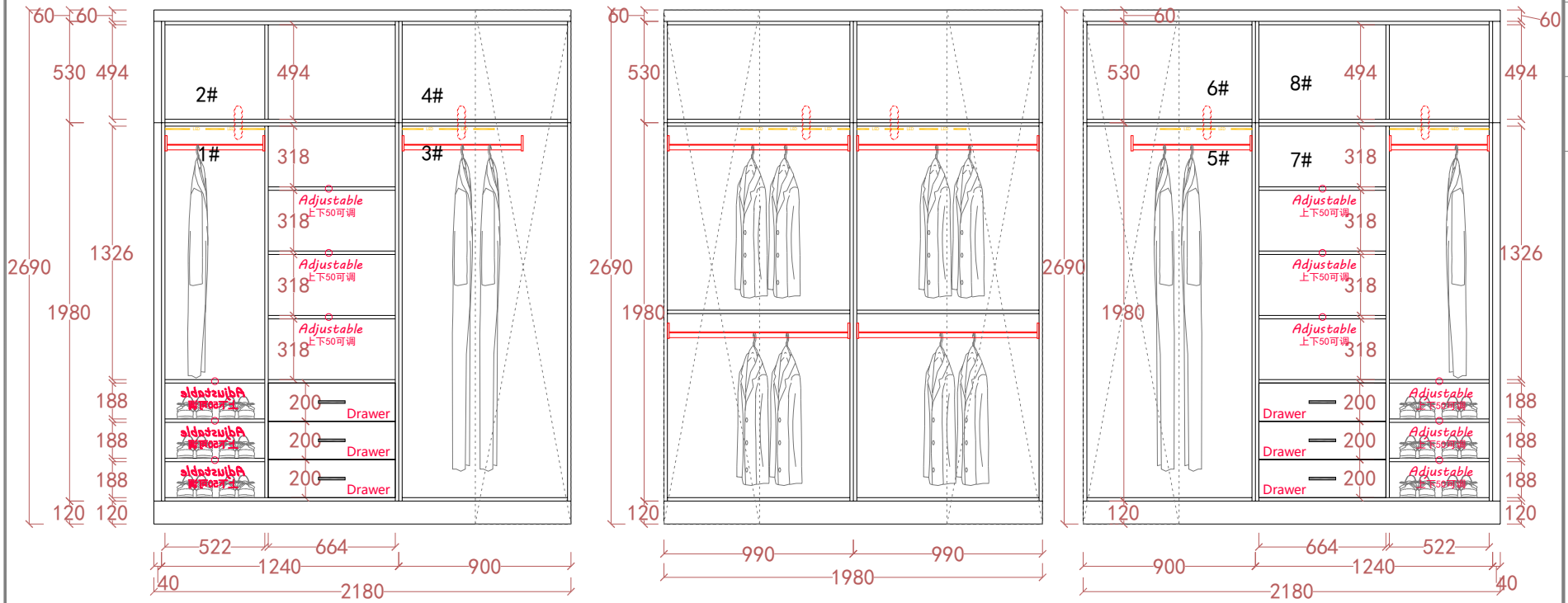

ELEVATION A

ELEVATION B

ELEVATION C

BENSON

DESIGN FIRM
Benson Cabinetry (Foshan) Co., Ltd.

This drawing is copyright
Contractors shall work from figured dimensions only
Contractors must check all dimensions on site
Contractors must be reported immediately to architects

Customer Signature

Project incharge signature

Approved by

Date:

A144 UNIT②/MASTER BED TV CABIENT

Optimized Version

BENSON

Material

Door1 : 18mm PB（GM5036）

Carcass1 :18mm PB（GM5036）

Handle :明装拉手（客备）

DRW&HNG :DTC soft close

ALL handles client-supplied.

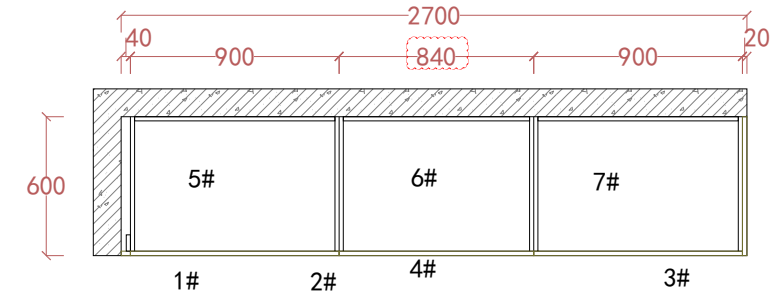

PLAN VIEW

floor

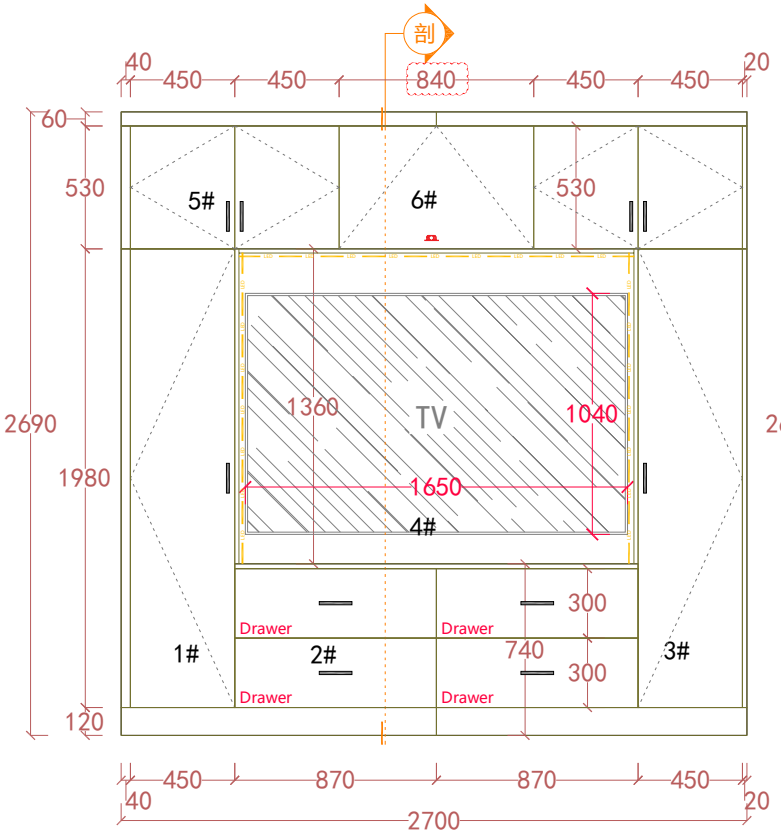

OUTSIDE VIEW

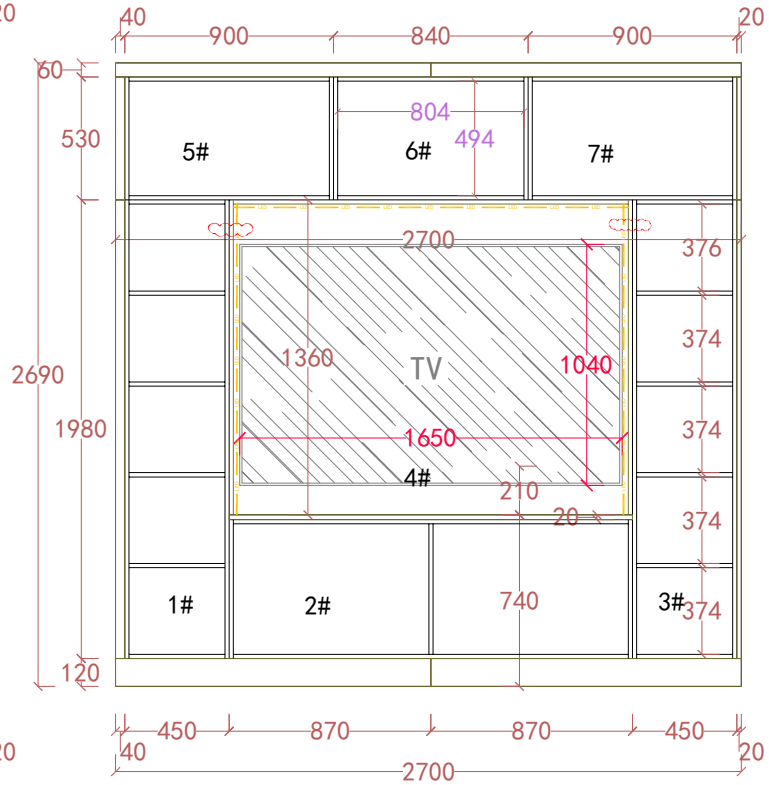

INNER VIEW

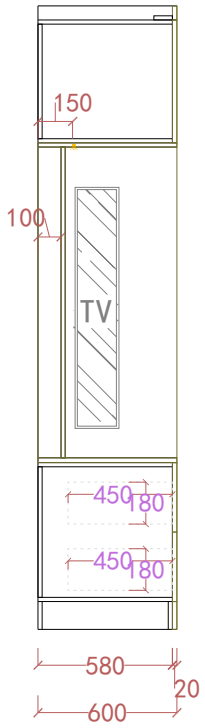

SECTION VIEW

DESIGN FIRM
Benson Cabinetry (Foshan) Co., Ltd.

This drawing is copyright
Contractors shall work from figured dimensions only
Contractors must check all dimensions on site
Contractors must be reported immediately to architects

Customer Signature

Project incharge signature

Approved by

Date:

A144 UNIT②/Bedroom 2

Optimized Version

BENSON

Material

Door1 : 18mm PB（GM5036）

Carcass1 :18mm PB（GM5036）

Handle :明装拉手（客备）

DRW&HNG :DTC soft close

ALL handles client-supplied.

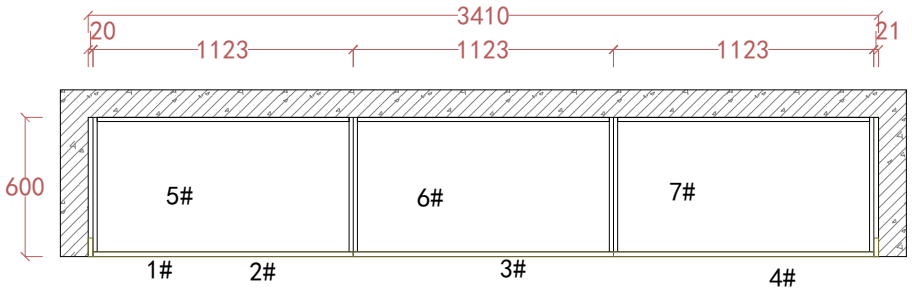

PLAN VIEW
floor

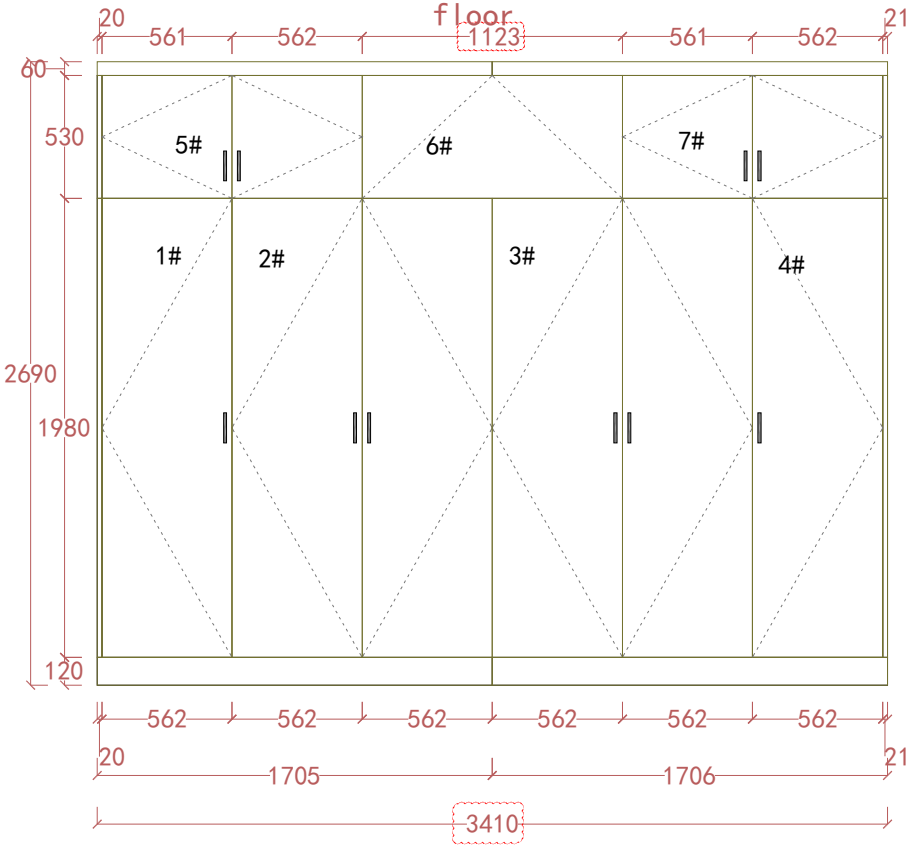

OUTSIDE VIEW

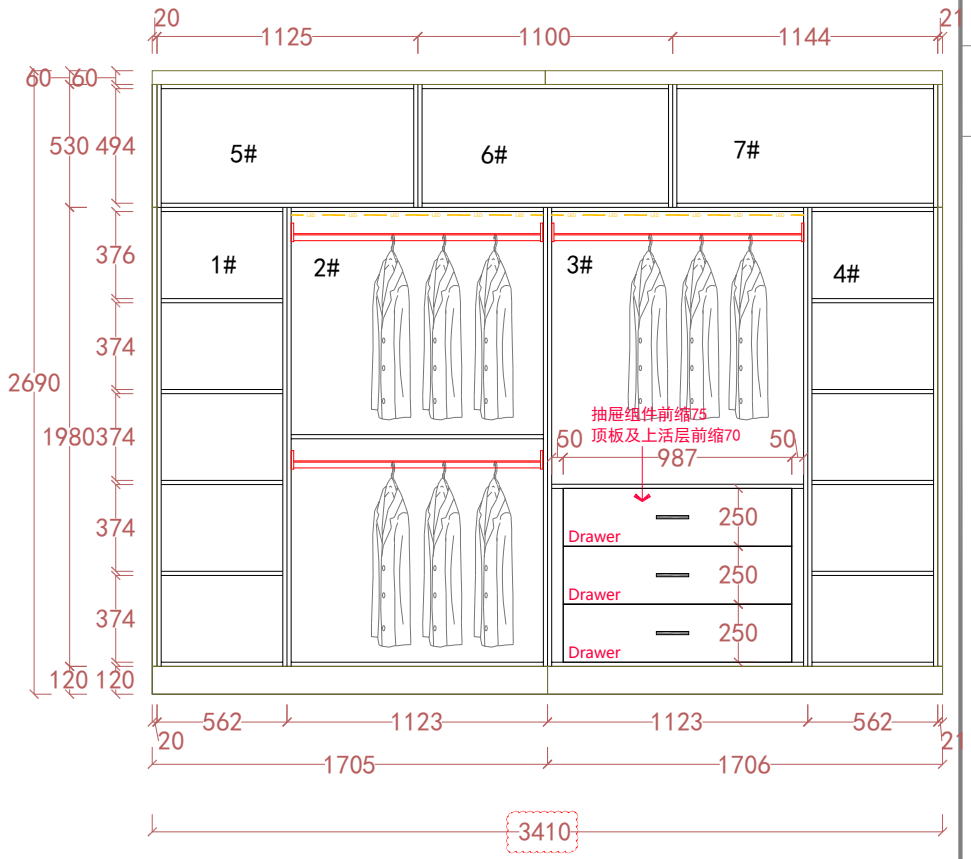

INNER VIEW

DESIGN FIRM
Benson Cabinetry (Foshan) Co., Ltd.

This drawing is copyright
Contractors shall work from figured dimensions only
Contractors must check all dimensions on site
Contractors must be reported immediately to architects

Customer Signature

Project incharge signature

Approved by

Date:

A144 UNIT②/Bedroom 3

Optimized Version

BENSON

Material

Door1 : 18mm PB（GM5036）

Carcass1 :18mm PB（GM5036）

Handle :明装拉手（客备）

DRW&HNG :DTC soft close

ALL handles client-supplied.

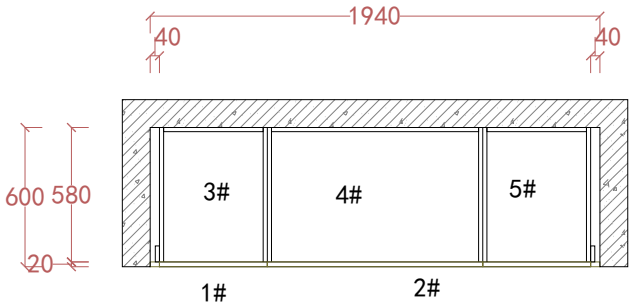

PLAN VIEW

floor

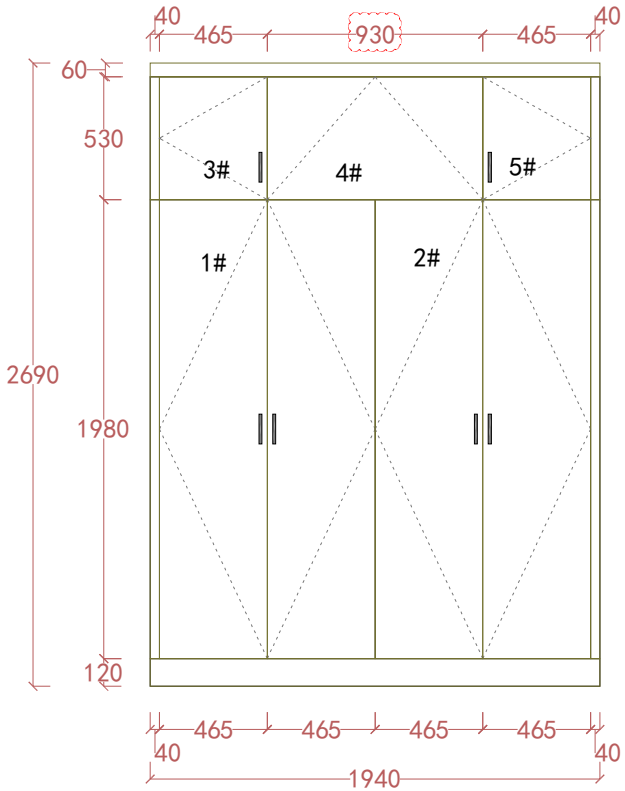

OUTSIDE VIEW

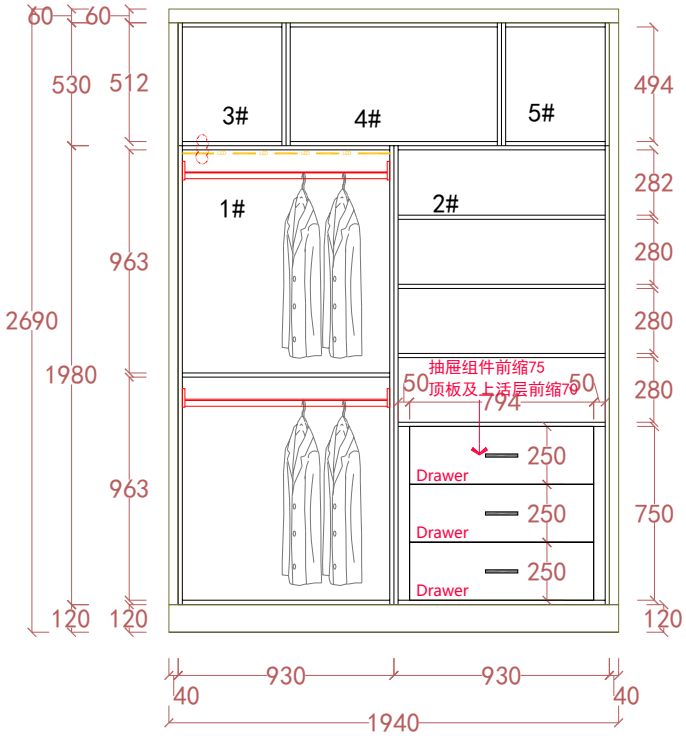

INNER VIEW

DESIGN FIRM
Benson Cabinetry (Foshan) Co., Ltd.

This drawing is copyright
Contractors shall work from figured dimensions only
Contractors must check all dimensions on site
Contractors must be reported immediately to architects

Customer Signature

Project incharge signature

Approved by

Date: